Czech Metrology Institute
Notified Body No. 1383
Okružní 31, 638 00 Brno, Czech Republic
tel. +420 545 555 111, fax +420 545 222 728
www.cmi.cz

V 3112

EU-TYPE EXAMINATION CERTIFICATE

Number: TCM 142/25 - 6010

Addition 1

This addition replaces all previous versions of this certificate in full wording.

In accordance: with Directive 2014/32/EU of the European Parliament and of the Council on the harmonisation of the laws of the Member States relating to the making available on the market of measuring instruments (implemented in Czech Republic by Government Order No. 120/2016 Coll.).

Manufacturer: Aquestia Ltd.
Dorot
7917500, Israel

For: water meter – turbine (Woltman), dry dial

Type: DIH-A-W

Accuracy class: 2

Temperature class: T30 or T50

Valid until: 2 April 2035

Document No: 0511-CS-A003-25

Description: Essential characteristics, approved conditions and special conditions, if any, are described in this certificate.

Date of issue: 22 January 2026

Certificate approved by:

Český metrologický institut
-3-

Ing. František Staněk, PhD.

1 Characteristics of the instrument

The water meters type DIH-A-W are designed to measure, memorise and display the volume at metering conditions of water passing through the measurement transducer in the sense of the Directive 2014/32/EU of the European Parliament and of the Council of the harmonisation of the laws of the Member States relating to the making available on the market of measuring instruments (implemented in Czech Republic by Government Order No. 120/2016 Coll.), as amended.
The water meters type DIH-A-W are turbine meters with turbine's axis in the flow direction (Woltman meters). The meters are equipped with dry (plastic register) or super dry (copper can or stainless steel can register) mechanical indicating device.
The water meters type DIH-A-W consist of a ductile iron body and a measuring unit. The water meter body has a connecting flange at the inlet and 3" BSPP female thread at the outlet. The measuring unit is connected to the body by a flange cover which is fixed by four screws and sealed by a rubber o-ring. Downstream the measuring unit a 90° angled diaphragm valve with hydraulic control is included.
The measuring unit consists of a plastic holder with bushes for an impeller, an impeller with a stainless steel shaft, a transmission with magnetic coupling to the indicating device, the flange cover made of iron and brass with an adjusting screw, a plastic register cover fixed by an immovable plastic plate, a plastic bracket for an indicating device (in case of copper can or stainless steel can register only) a dry (plastic register) or a super dry (copper can or stainless steel can register) mechanical indicating device and an upper plastic lid.
The mechanical register of the water meter consists of numbered rollers with six drums and black numbers displaying volume in cubic meters and two red rotary pointers and one rotary plate with red numbered scale displaying smaller submultiples of cubic meters. The meters are equipped with a star wheel with six arms which can be used for rapid testing.
The water meters type DIH-A-W can be equipped with a reed impulse transmitter which can be used for remote reading. However, the reed impulse transmitter output has not been tested and it is not a part of this certification.
The water meters shall be installed to operate in a position with the measuring part oriented vertically with flow going upwards.

2 Main characteristics

Manufacturer:	Aquestia Ltd.	
Model number:	DIH-A-W	
Nominal diameter:	80	100
Type details:		
Q_1 [m³/h]:	0.63	0.63
Q_2 [m³/h]:	1.008	1.008
Q_3 [m³/h]:	63	63
Q_4 [m³/h]:	78.75	78.75
Q_3/Q_1:	100	
Q_2/Q_1:	1.6	
Q_4/Q_3:	1.25	
Measuring principle:	Turbine (Woltman)	
Accuracy class:	2	
Maximum permissible error for the lower flowrate zone (MPE_l):	±5 %	
Maximum permissible error for the upper flowrate zone (MPE_u):	±2 %	
Temperature class:	T30 or T50	
Water pressure class:	MAP 16	
Pressure loss class:	ΔP 40	
Maximum admissible temperature [°C]:	50	

Maximum admissible pressure [MPa]:	1.6	
Orientation limitation:	V, measuring part in vertical position with flow upwards	
Resolution of the indicating device [dm^3]:	0.5	
Indicating range [m^3]:	999 999	
Resolution of the device for rapid testing [pulses/liter]:	6.2631579	3.315
EUT testing requirements (OIML R 49-2:2013, 8.1.8):		
Category:	Turbine water meter with no electronic devices	
Case:	A	
Installation details:		
Connection type:	Inlet: flange; Outlet: 3" BSPP female thread	
Minimum straight length of inlet pipe [mm]:	0	
Minimum straight length of outlet pipe [mm]:	0	
Flow profile sensitivity class:	U0D0	
Flow conditioner (details if required):	No	
Mounting:	90° elbow installation with measuring part in vertical direction and outlet part in horizontal direction	
Orientation:	V, measuring part in vertical position with flow upwards	
Length [mm]:	451	451
Reverse flow:	Not designed to measure	
Information specified by the manufacturer (information in the table below is not certified)		
Reed switch power supply (U_{max} / I_{max}):	max. 24 V / 0.01 A	
Reed switch K-factor (pulses / Litre):	0.001 or 0.0001	

3 Tests

Technical tests of the water meters type DIH-A-W were performed in compliance with the International Recommendation OIML R 49 Edition 2013 (E) with conformity to EN ISO 4064:2017, Type Evaluation report No. 0511-ER-V095-25 with related Test report No. 6015-PT-P0003-25.

4 Conformity marks and inscriptions

The water meters type DIH-A-W shall be clearly and indelibly marked with the following information:

- Water meter type
- Unit of measurement (m^3)
- Numerical value Q_3 in m^3/h (Q_3 ××) and the ratio Q_3 / Q_1 (R ××),
- EU-type examination certificate number
- Manufacturer´s name, registered trade name or registered trade mark
- Post address of manufacturer
- Year of manufacture, two last digits of the year of manufacture, or the month and year of manufacture
- Serial number (as near as possible to the indicating device)
- Direction of flow, by means of an arrow (shown on both sides of the body or on one side only provided the direction of flow arrow is easily visible under all circumstances)
- Maximum admissible pressure (MAP ××)
- The temperature class (T××)
- The pressure loss class (ΔP ××)
- Orientation limitation marks: V (vertical position with flow upwards)
- The installation sensitivity class (U×D×)

There are additional data required if the water meter is equipped with an ancillary device:

- Output signals for ancillary devices (type / levels)
- External power supply requirements (voltage – frequency)

These markings shall be visible without dismantling the water meter after the instrument has been placed on the market or put into use. Example is in Figure 3.

5 Additional specifications

The water meters type DIH-A-W shall be put onto the market in line with the procedure of conformity assessment according to the Module D or F of the Directive 2014/32/EU as well as in compliance with the technical description of this report and shall be tested in accordance with the requirements determined in EN ISO 4064-1:2017, respectively OIML R 49-1:2013.

A metrological test may only be performed by a producer, or a notified body respectively in line with the conformity assessment procedure by the D or F Modules of the Directive 2014/32/EU, respectively.

6 Ensuring the integrity of the instruments

The water meters type DIH-A-W are mechanically sealed at two positions by a wire with a lead or plastic seal. The first sealing wire connects the water meter body with a screw fixing the water meter flange cover. The removable indicating device is protected against manipulation by the second seal fixing a pin near the connection of the upper plastic lid and the plastic register cover. The location and type of the seal is described in Figure 1.
Optionally the meters can be equipped with a safety pin between the dial window and the dial plate to indicate a rough treatment of the meter.
Connection of the water meter body and a reed impulse transmitter has to be sealed, if equipped.

7 Drawings of the instruments

The water meters type DIH-A-W are manufactured according to the technical documentation of the manufacturer. The technical documentation contains the following drawings:

Document reference	Date	Brief description
HY11S33PB000001	03/2024	Assembly drawing DN80, incl. material list
HY11S43PB000001	03/2024	Assembly drawing DN100, incl. material list
0066530WL0	12/2025	Dial drawing DN80
0066540WL0	12/2025	Dial drawing DN100
Exploded view		
Sealing description		

History of additions

Addition No.	Description
-	Issuing the certificate
Addition 1	Correction of the address of the manufacturer; update of the water meter marking

Figure 1: The water meter type DIH-A-W – view and sealing

Český metrologický institut
V-17-001

Figure 2: The water meter type DIH-A-W DN100 – view
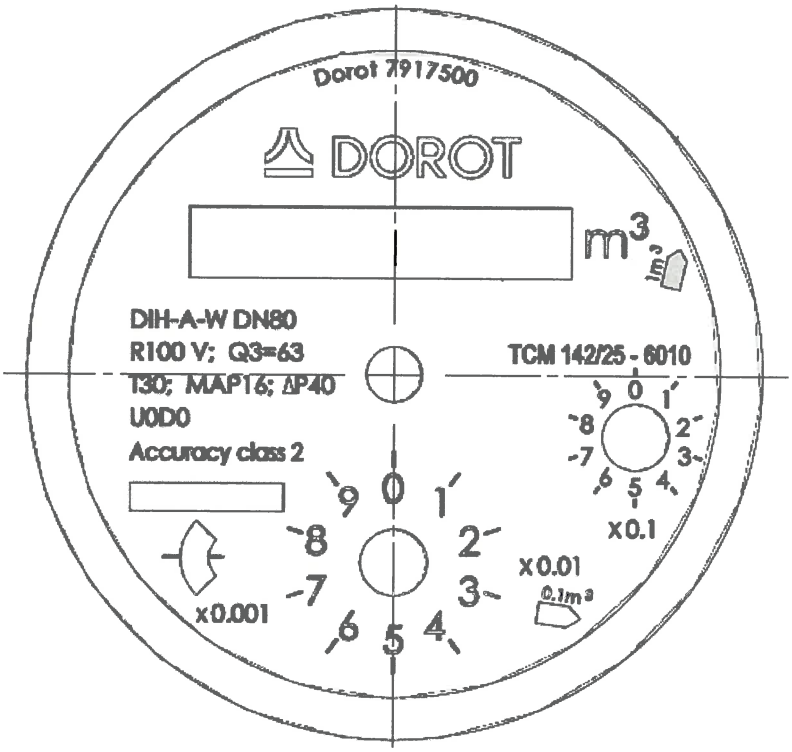
Figure 3: Example of the dial plate design. Rectangle in the bottom left segment of the drawing marks the position of a serial number.